REV.	ECN.NO.	MODIFY.CONTENT	DATE
A		NEW	2012/08/03

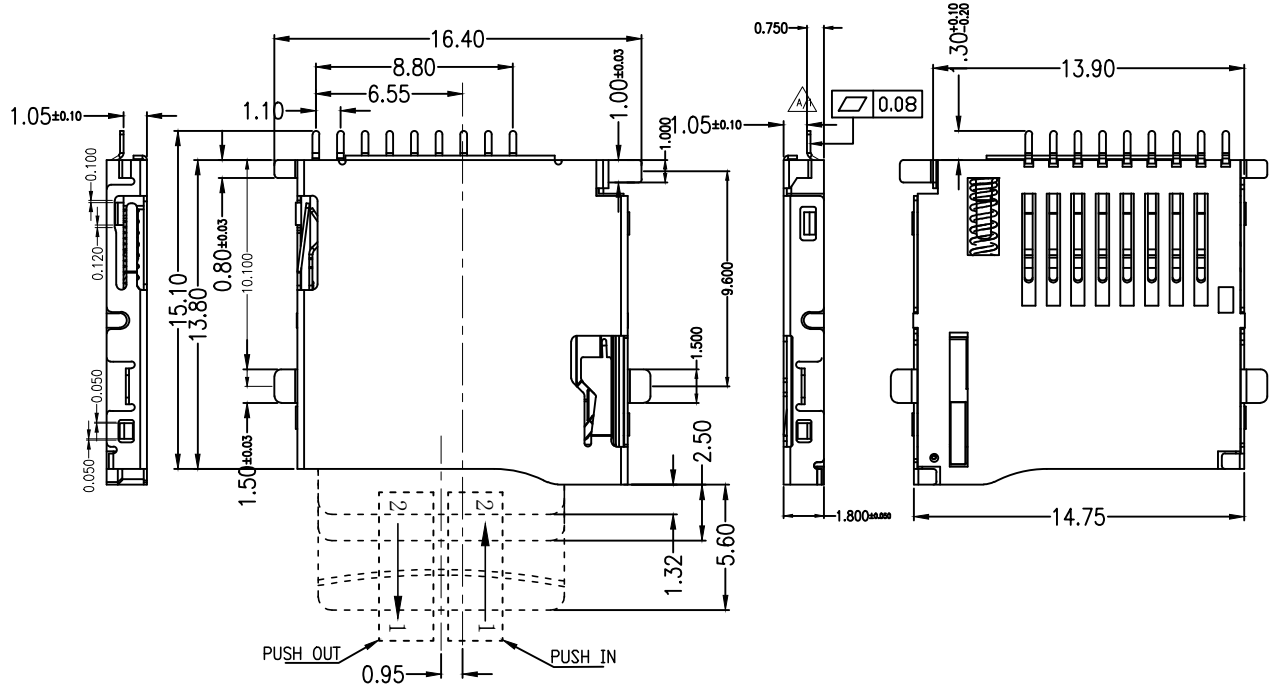

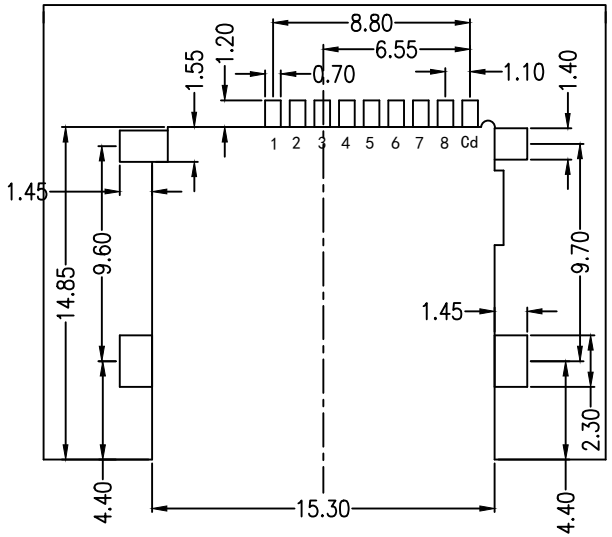

RECOMMENDED P.C.B HOLE LAYOUT
COMPONENT SIDE VIEW(TOLERANCE: +/−0.05)

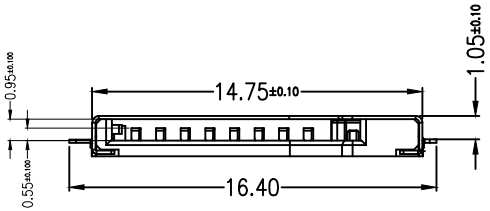

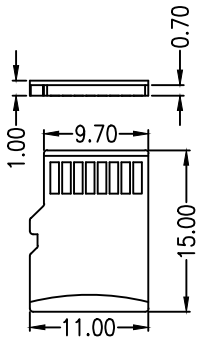

T−Flash Crad

NOTES:
1.MATERIAL:
HOUSING: HIGH TEMPERATURE THERMOPLASTIC UL94V_0,COLOR:BLACK.
CONTACT: COPPER ALLOYS.
COVER: COPPER ALLOYS OR STEEL.
2.PLATING:
UNDERPLATE: NICKEL.
CONTACT AREA: GOLD OVER NICKEL.
SOLDER AREA: TIN OVER NICKEL.
3.MULTIMEDIA CARD COMPATIBLE

PIN NO.	NAME	YTPE	DESCRIPTION
1	DAT2	I/O/PP	DATE LINE(BIT2)
2	CD/DAT3	I/O/PP	CARD DETECT DATE LIN(BIT3)
3	CMD	PP	COMMAND RESPONSE
4	VDD	S	SUPPLY VOLTAGE
5	CLX	I	CLOCK
6	VSS	S	SUPPLY VOLTAGE GROUND
7	DAT0	I/O/PP	DATE LINE(BIT0)
8	DAT1	I/O/PP	DATE LINE(DIT1)

GENERAL TOLERANCE		DWG NO.	JYSA0915−002	APPD:	WIND	Scale	1:1
X.±0.5	x.°±5°	Title	1.8H PUSH T−FLASH CRAD CONN 反沉 1.05mm	CHKD:		UNIT	mm
.X±0.25	.x°±2°			DR:			
.XX±0.15	.xx°±1°	Part NO.	JYS−TF180−063	Date	2012/08/03		
			JYSCONN	Shenzhen JYSCONN Electronics Co., LTD.			
SHEET	1/1						